GENERAL NOTES:
1. MATERIAL:
2. SPECIAL FINISH: **N/A**
3. SURFACE ROUGHNESS (UNLESS SPECIFIED OTHERWISE): **N/A** (AVERAGE MICRO-INCHES)
4. INTERPRET DIMENSIONS AND TOLERANCES PER ASME Y14.5M-1994
5. DEBURR AND BREAK ALL SHARP EDGES, MAX 0.010" (UNLESS SPECIFIED OTHERWISE)
6. PARTS ARE TO BE CLEAN AND FREE OF OIL, GREASE, AND OTHER CONTAMINANTS
7. DIMENSIONS INCLUDE CHEMICALLY APPLIED FINISHES IF APPLICABLE

REVISION HISTORY				
ZONE	REV	DESCRIPTION	DATE	APPROVED
	0	DO NOT FABRICATE		

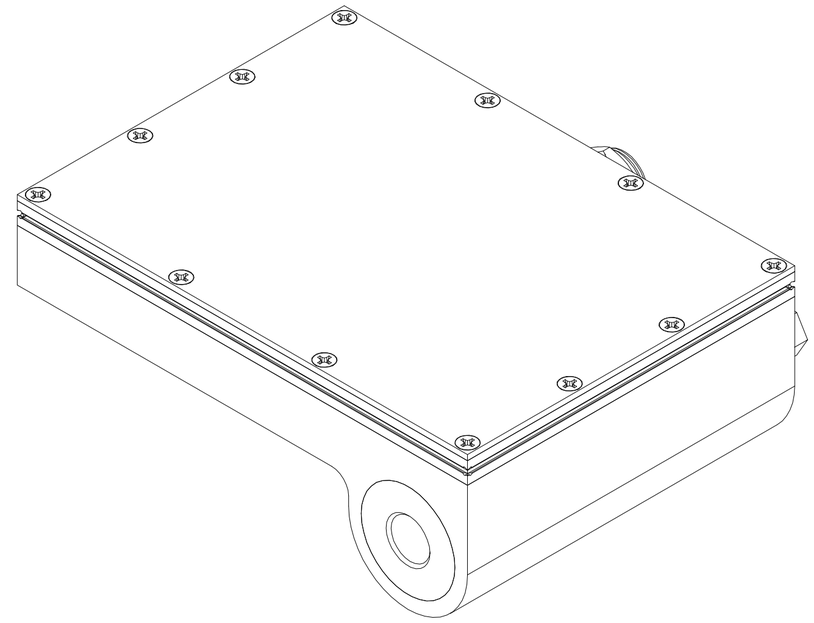

LAB/DEPT	DESIGNER	PROJECT	FILE NAME	PART NUMBER	QTY	DESCRIPTION	VENDOR	ESTIMATED C	A.I. VENDOR	A.I. PART #
FLY FACILITY (SHARED RESOURCE)	JORDANJ	P-48101	SIMPLE CHILLED AIR BASE PLATE.ipt	J001816	1	NON-CONDENSING AIR CHILLED COOLING PLATE WITH SINTERED METAL SURFACE AND CONDENSATION DRAUGH	HHMI: JFRC - ID&F		N/A	N/A
FLY FACILITY (SHARED RESOURCE)	JORDANJ	P-48101	SIMPLE CHILLED AIR SINTERED PLATE.ipt	J001813	1	MOTT CORPORATION PN: 1100-10-12-.062-20-A, 316 STAINLESS	HHMI: JFRC - ID&F		MOTT CORPORATION	1100-10-12-.062-20-A
FLY FACILITY (SHARED RESOURCE)	JORDANJ	P-48101	SIMPLE CHILLED AIR DRAIN PLATE.ipt	J001814	1	NON-CONDENSING AIR CHILLED COOLING PLATE WITH SINTERED METAL SURFACE AND CONDENSATION DRAUGH	HHMI: JFRC - ID&F		N/A	N/A
REISER (LAB)	JORDANJ	P-67401	SIMPLE CHILLED AIR 12mm X 17mm VIAL ADAPTER.ipt	J001818	1	NON-CONDENSING COOLING PLATE 12mm VIAL ADAPTER	HHMI: JFRC - ID&F		N/A	N/A
	JORDANJ		SMC AS2211F-UO1-07.ipt	9066K18	1	Corrosion Resistant Air Flow Control Valve 1/4" Tube to 1/8" NPT Male Flow Control Direction (alternate vendor: SMC AS2211F-UO1-07)	MCMASTER		N/A	N/A
FLY FACILITY (SHARED RESOURCE)	JORDANJ	P-48101	SIMPLE CHILLED AIR WALL FITTING.ipt	51495K117	1	Nckl-Pltd Brass Push-to-Connect Tube Fitting Adapter for 1/4" Tube OD X 3/8" NPT Male Pipe	MCMASTER		N/A	N/A
	JORDANJ		91099A167.ipt	91099A167	12	18-8 SS FLAT UNDERCUT HEAD PHIL MACHINE SCREW 4-40 THREAD, 1/2" LENGTH	MCMASTER		N/A	N/A
	JORDANJ		BREATHER VENT.ipt	9833K21	1	Breather Vent 1/8 NPT Male, 2 Max SCFM, 7/16" Height	MCMASTER		N/A	N/A

PARTS LIST

NOTICE:
INFORMATION CONTAINED IN THIS DOCUMENT OR ANY REPRODUCTION THEREOF, IS PROPRIETARY INFORMATION AND PROPERTY OF HOWARD HUGHES MEDICAL INSTITUTE. IT SHALL NOT BE DISCLOSED, COPIED, DUPLICATED OR USED FOR MANUFACTURE, PRODUCTION OR PROCUREMENT, WITHOUT THE EXPRESS WRITTEN PERMISSION OF HOWARD HUGHES MEDICAL INSTITUTE.

(UNLESS SPECIFIED OTHERWISE)
PRIMARY UNITS: INCHES
[SECONDARY UNITS]: MILLIMETERS

PRIMARY TOLERANCES:	
X.X	± 0.020
X.XX	± 0.010
X.XXX	± 0.005
X.XXXX	± 0.0005
ANGULAR	± 0.5 DEG

- DO NOT SCALE DRAWING -
THIRD ANGLE PROJECTION:

HHMI
HOWARD HUGHES MEDICAL INSTITUTE
HHMI janelia farm research campus

SIMPLE CHILLED AIR NON-CONDENSING COOLING PLATE.iam

SIZE	PART NUMBER	REV	SHEET
C	J001819	0	1 OF 1